PLEASE VERIFY GRAIN DIRECTION

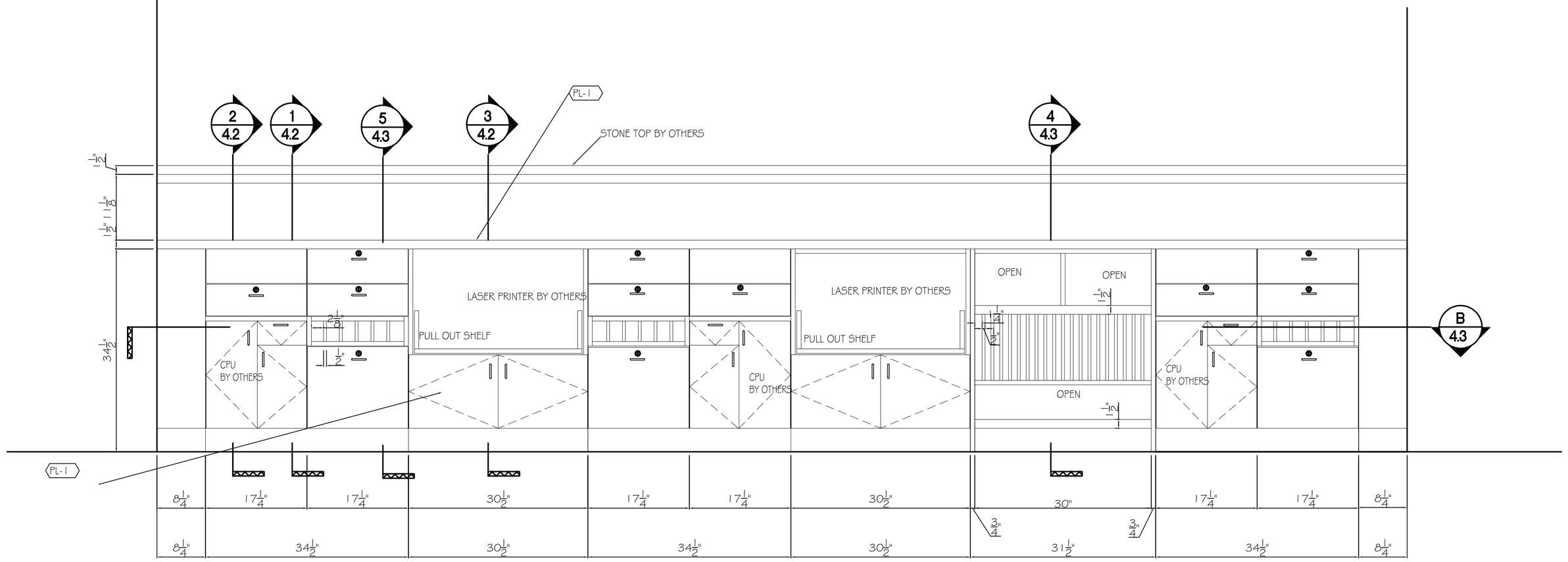

C 4.2 ELEVATION
1" = 1'

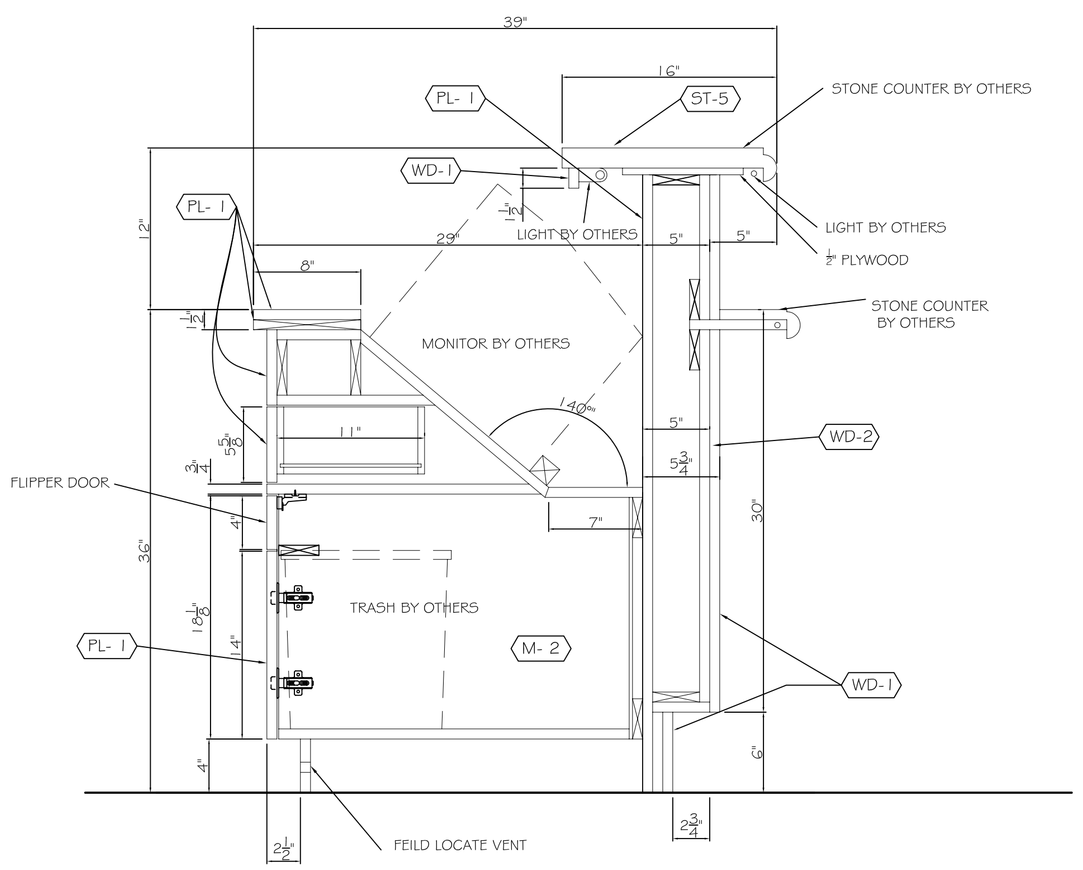

1 4.1 SECTION
1-1/2" = 1'

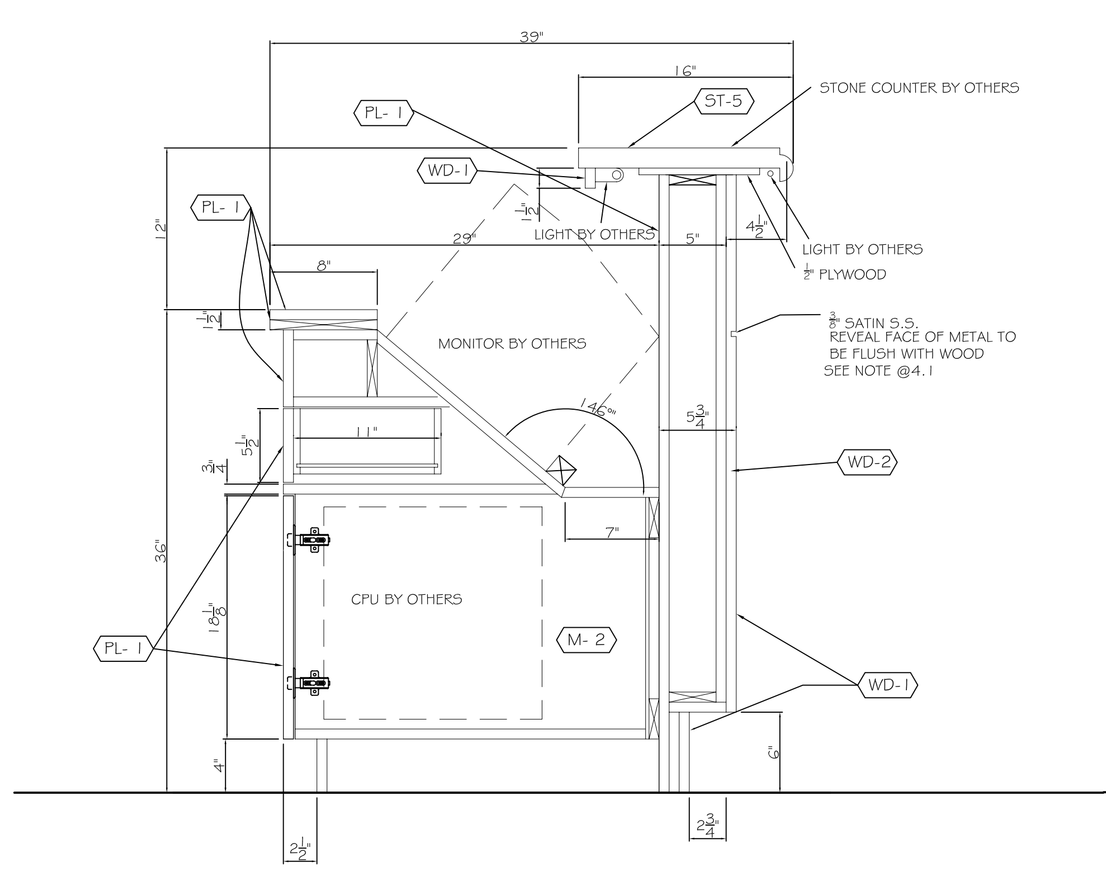

2 4.2 SECTION
1-1/2" = 1'

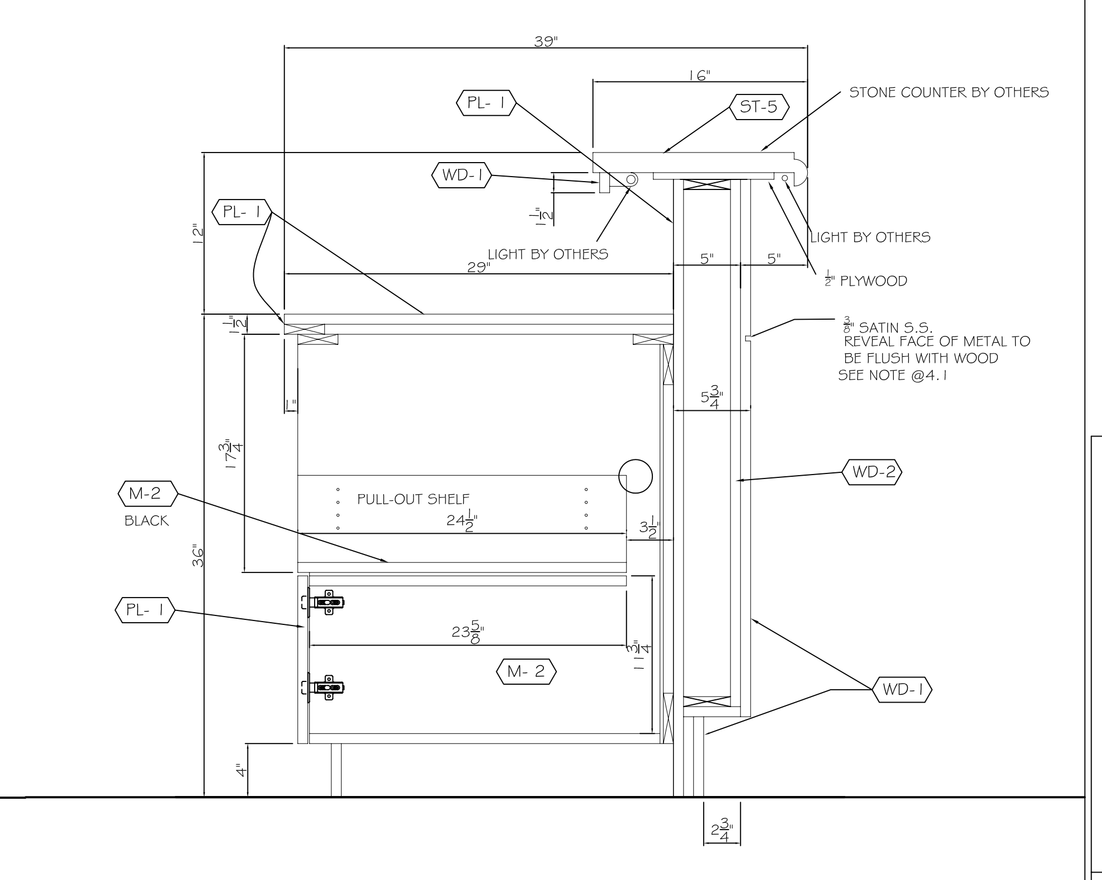

3 4.2 SECTION
1-1/2" = 1'

PRINT RECORD
FOR APPROVAL
DATE APPROVED
FILE & FIELD

REVISIONS

NO.	DATE	DESCRIPTION	BY

PROJECT
LOCATION
CONTRACTOR
DRAWING TITLE LOBBY-100 FRONT DESK
SCALE: AS SHOWN
DATE: 10/21/2005
DATE:
DRAWN BY:
CHECKED BY:
FILE:
JOB NO.
REV. 0
SHEET: 4.2