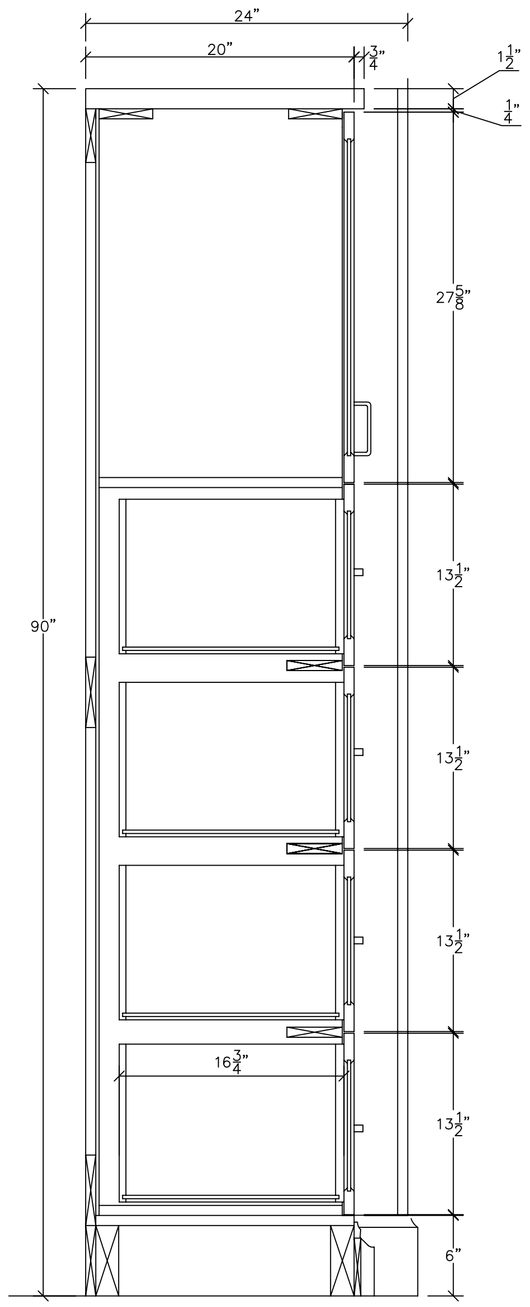


1/44 SECTION
1-1/2"=1'-0"

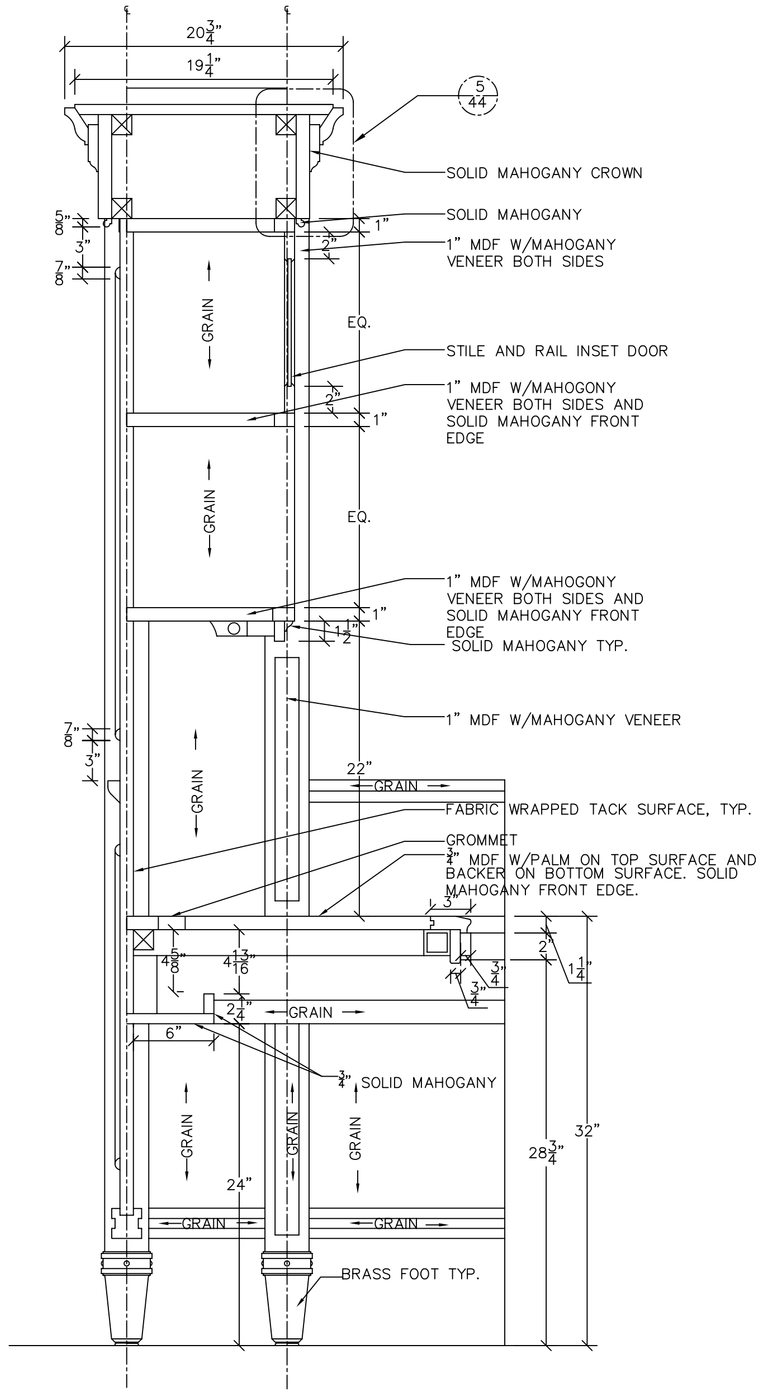


SECTION
2/44 ADMIN ASST WORK AREA
1-1/2"=1'-0"
AE119

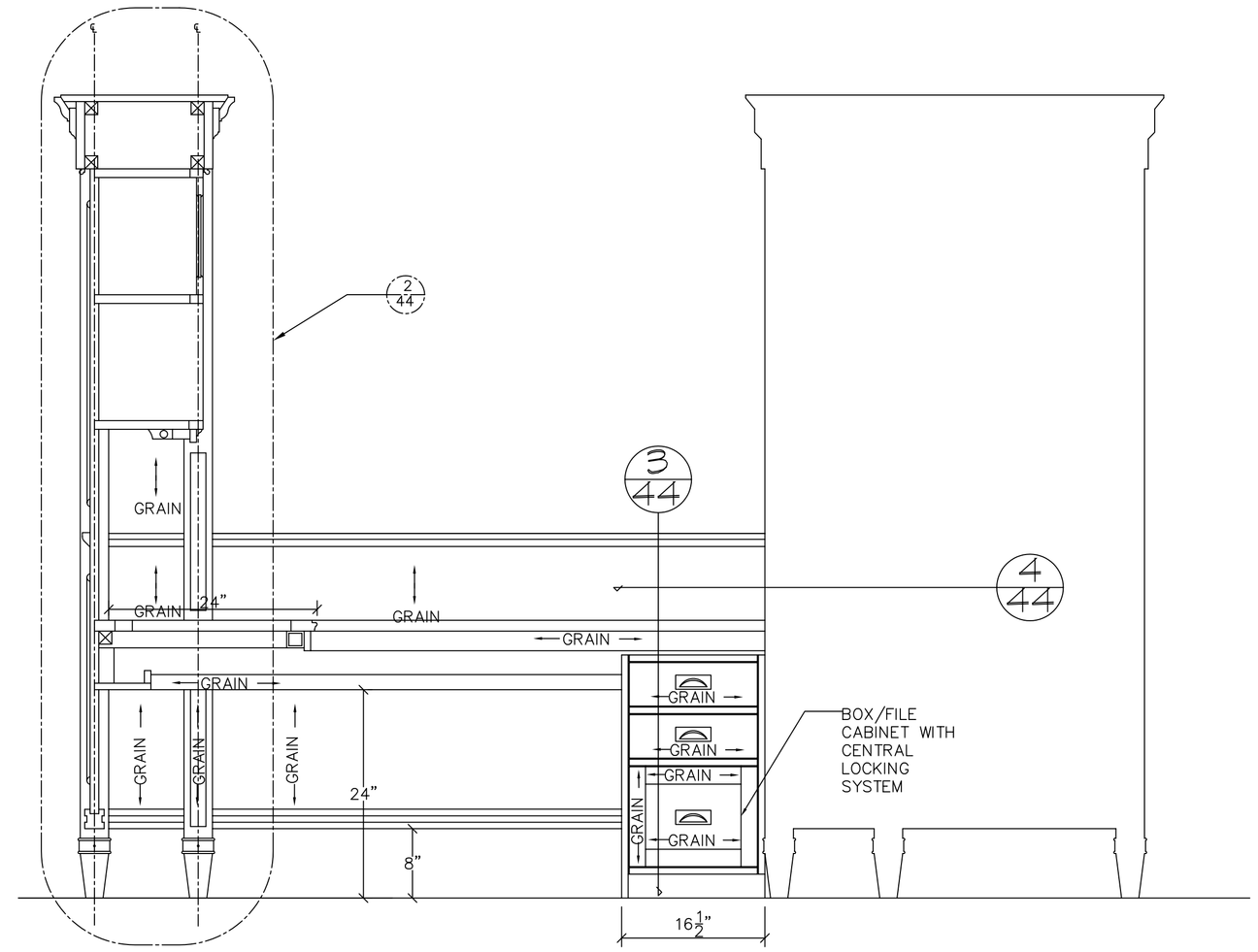


B/44 ADMINISTRATIVE ASSISTANCE B220
1"=1'-0"
C1/AE820

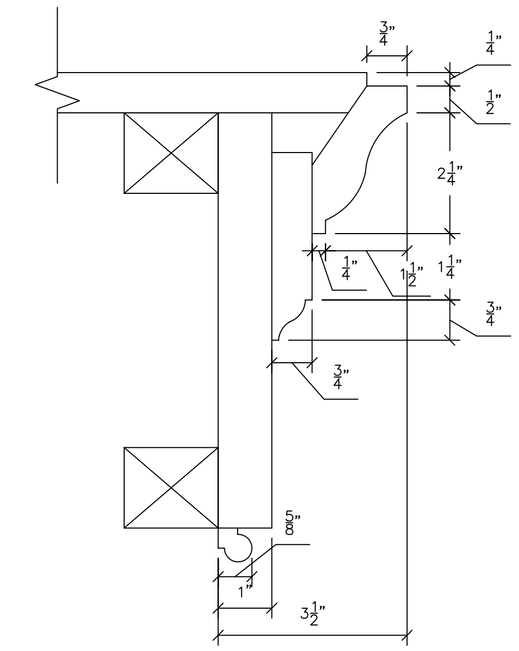


5/44 DETAIL
6"=1'-0"

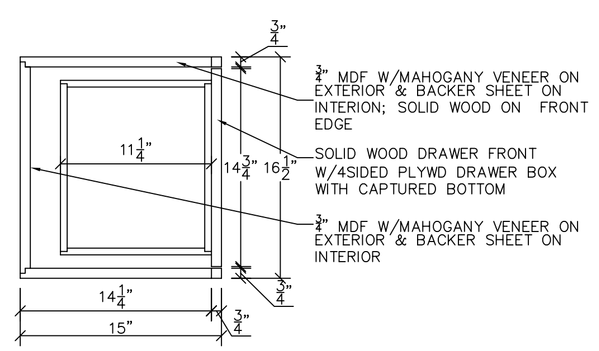


FILE DRAWER DETAILS
4/44 ADMIN ASST WORK AREA
1-1/2"=1'-0"
B6/AE821

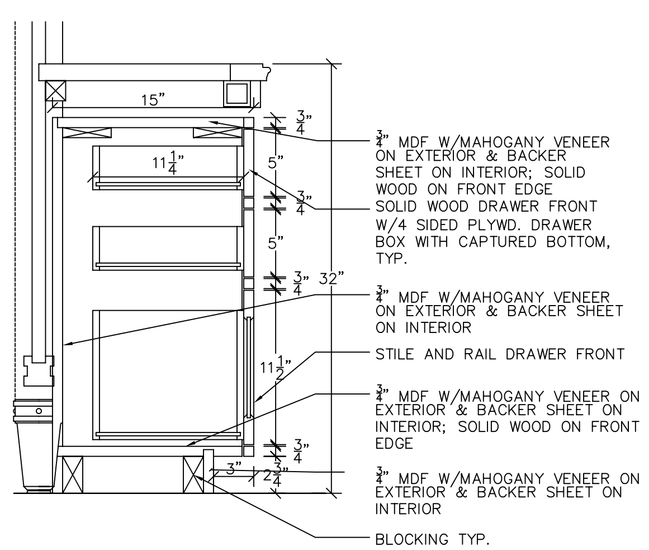


FILE DRAWER DETAILS
3/44 ADMIN ASST WORK AREA
1-1/2"=1'-0"
AE119

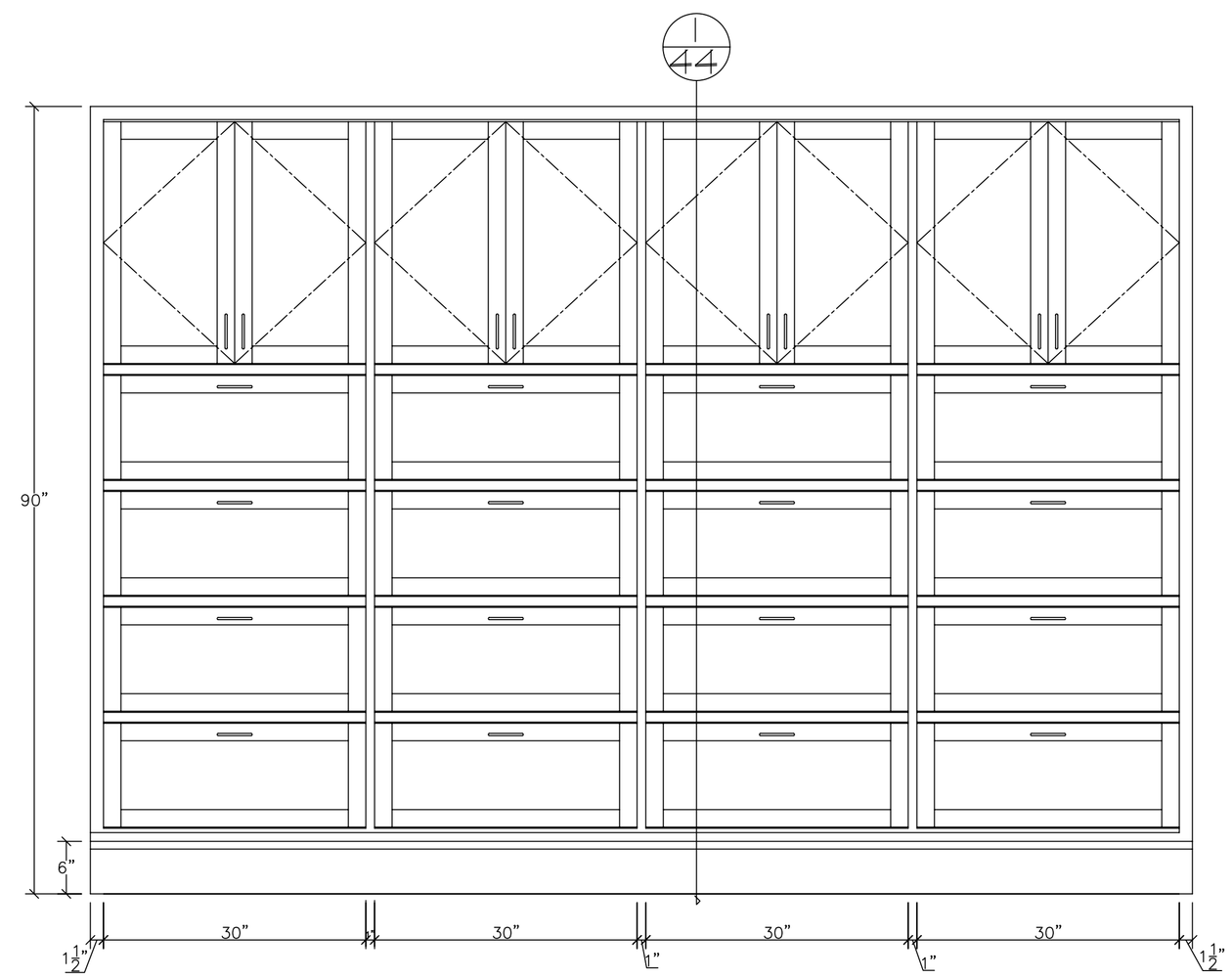


C/44 ADMINISTRATIVE ASSISTANCE B220
1"=1'-0"
AE119

## FACTORY ORDER INFORMATION

NOTE: THIS INFORMATION IS USED BY OUR FACTORY FOR FABRICATION PURPOSES. WE REQUEST THAT THE ARCHITECT, OWNER, AND GENERAL CONTRACTOR REVIEW THESE SHEETS IN ORDER TO INCORPERATE ALL ITEMS WITH OTHER TRADES AND IN TO ENSURE THAT ALL MATERIALS ARE FABRICATED WITH THE CORRECT INTENT OF THE OWNERS OUTLOOK OF THEIR BUILDING.

## KEYED NOTES

## GENERAL NOTES

## REVISION BLOCK

| | DATE: | DESCRIPTION | BY |
|---|---|---|---|
| 1 | | | |
| 2 | | | |
| 3 | | | |
| 4 | | | |
| 5 | | | |
| 6 | | | |
| 7 | | | |
| 8 | | | |
| 9 | | | |
| 10 | | | |

## JOB MATERIALS

| CASEWORK COLORS: | EXTERIOR | INTERIOR | CONCEALED |
|---|---|---|---|
| 1. STORAGE CAB. | | | |
| 2. BASE CAB. | | | |
| 3. UPPER CAB. | | | |
| 4. CORE MATERIAL: | | | |

CASEWORK EDGING COLORS:
1. BOX EDGING: .018 PVC
2. DOOR EDGING: 3MM PVC
3. INTERIOR EDGING: .018 PVC (WHITE)

COUNTERTOP COLORS:
1. PLAM COUNTERTOP: N/A
2. WOOD COUNTERTOP: N/A
3. CHEMSURF COUNTERTOP: N/A
4. EPOXY RESIN COUNTERTOP: N/A
5. STONE COUNTERTOP: N/A

HARDWARE LIST:
1. HINGES: BLUM #73T55580 120° SELF CLOSING
2. PLATES: BLUM #174H7100 FLUSH OVERLAY
3. PULLS: 4" BRUSHED ALUMINUM WIRE PULL
4. ROLLER CATCHES: AMEROCK #BP-9823-2G
5. ELBOW CATCHES: IVES #097 3100 ALUMINUM CAST
6. LOCKS: NATIONAL #C8053 NICKEL FINISH
7. K.V. STANDARDS: K.V. #182 WHITE EPOXY HEAVY DUTY
8. K.V. BRACKETS: K.V. #82 WHITE EPOXY HEAVY DUTY
9. DRAWER GLIDES: BLUM #230M CREAM WHITE 100lb RATED
10. FILE DRAWER GLIDES: ACCURIDE #4034 150lb RATED
11. WIRE GROMMETS: 2" DIA. BLACK PLASTIC
12. COAT RODS & FLANGES: K.V. #880 & #881
13. COAT HOOKS: HAFELE #885.06.209 CHROME - POLISHED
14. ADJUSTABLE SHELF SYSTEM: K.V. #345 NICKEL
15. IN-WALL BRACE: 1" x 2" x 2" BLACK METAL
16. ON-WALL BRACE: 1" x 2" x 2" BLACK METAL
17.
18.
19.

GLASS IF APPLICABLE:
FURNISHED BY HUETTER ☐ OTHERS ☐
INSTALLED BY HUETTER ☐ OTHERS ☐

COUNTERTOPS:
FURNISHED BY HUETTER ☐ OTHERS ☐
INSTALLED BY HUETTER ☐ OTHERS ☐

CASEWORK STAINED FINISH COLOR IF APPLICABLE:
PERFORMED BY HUETTER ☐ OTHERS ☐
STORAGE CABINETS:
BASE CABINETS:
UPPER CABINETS:

OWNER:
ARCHITECT:
CONTRACTOR:

DRAWN BY: CBD
CHECKED BY: GCD
DATE: 9/21/2005
REVISIONS: 1 2 3 4

SHEET TITLE: ARCHITECTURAL INTERIOR MILLWORK ELEVATIONS

MEMBER: ARCHITECTURAL WOODWORK INSTITUTE
JOB NUMBER: 1034

SHEET NUMBER
44
of 99