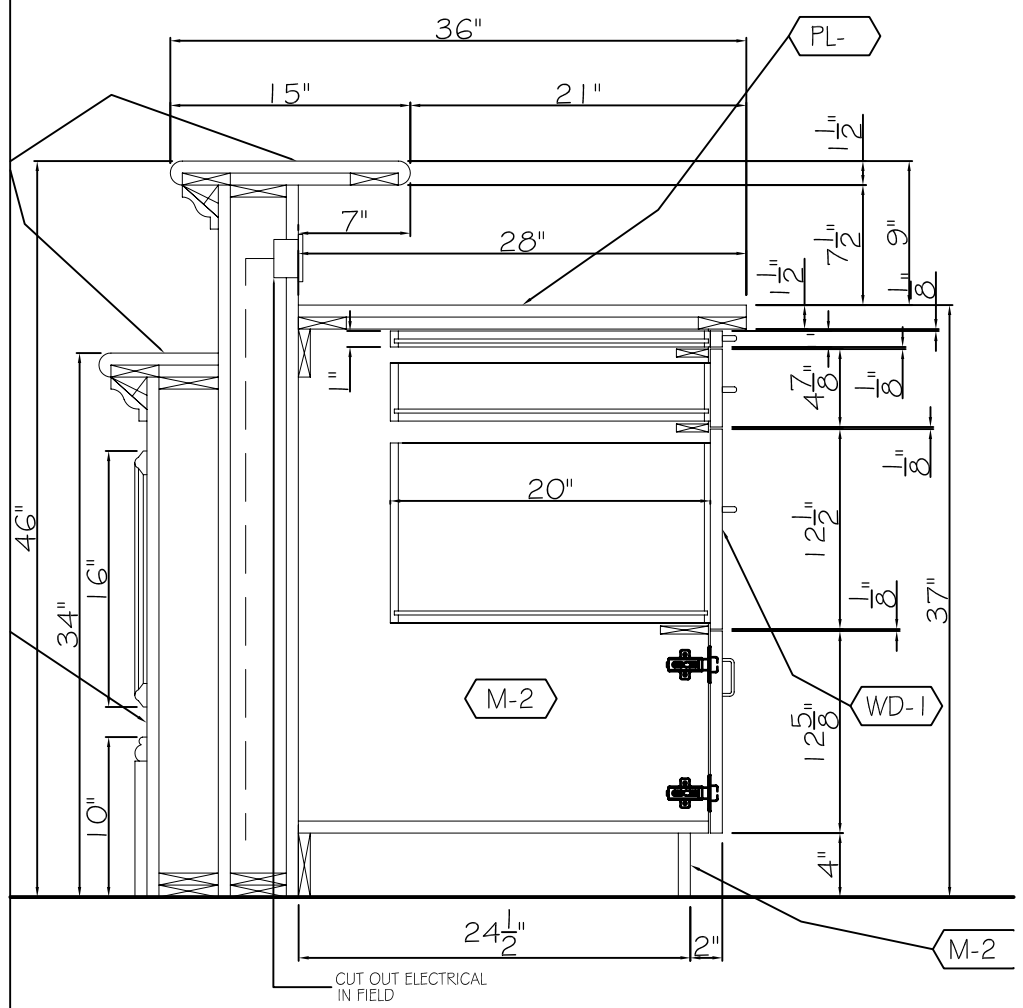

1 / 2.3 SECTION

3/4" = 1'

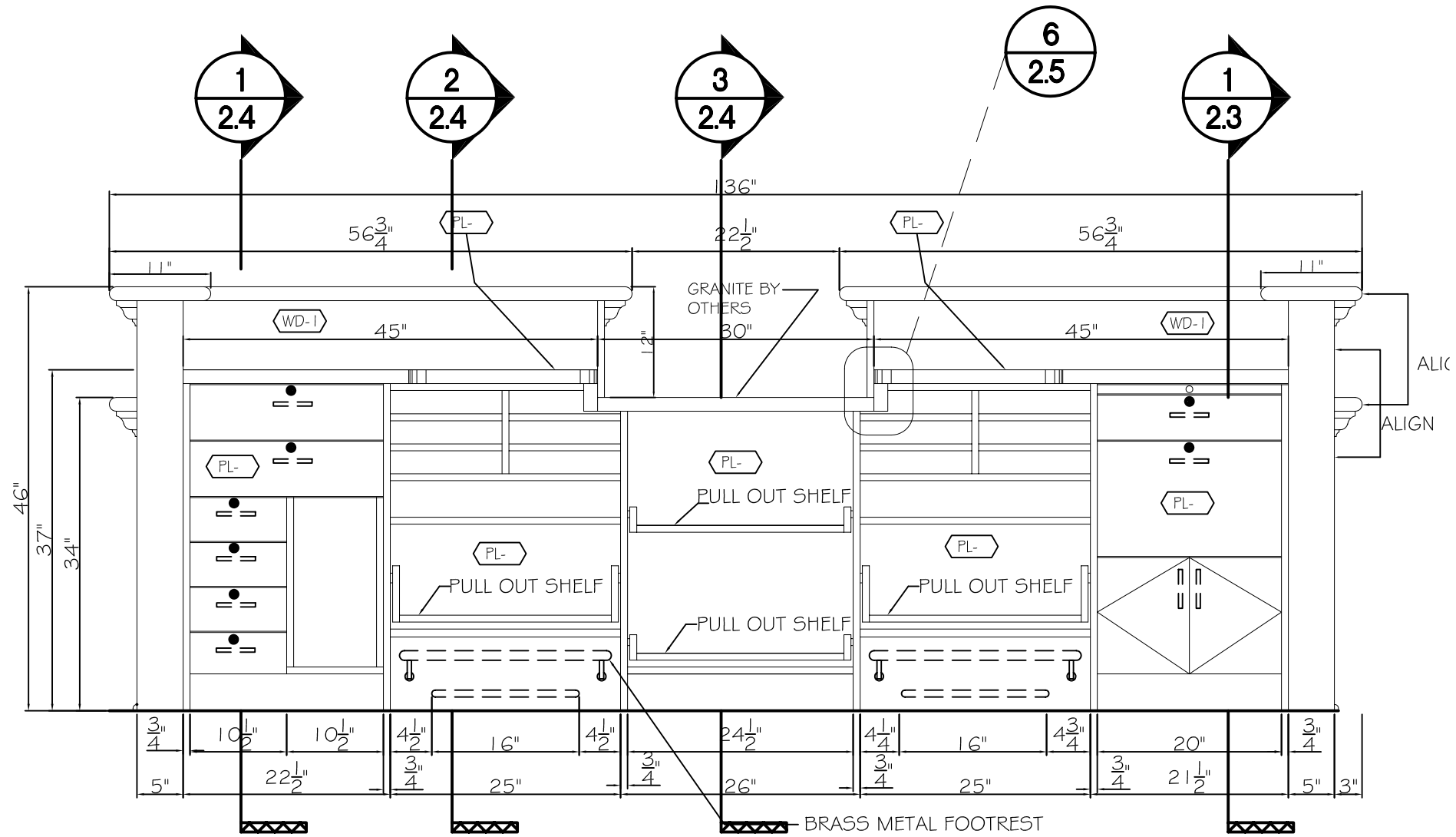

C / 2.3 ELEVATION

3/4" = 1'

JOB NAME		DRAWN BY
LOCATION		DATE 11/24/2006
ROOM NAMES REGISTRATION DESK -HO4A		SHEET NO. 2.3