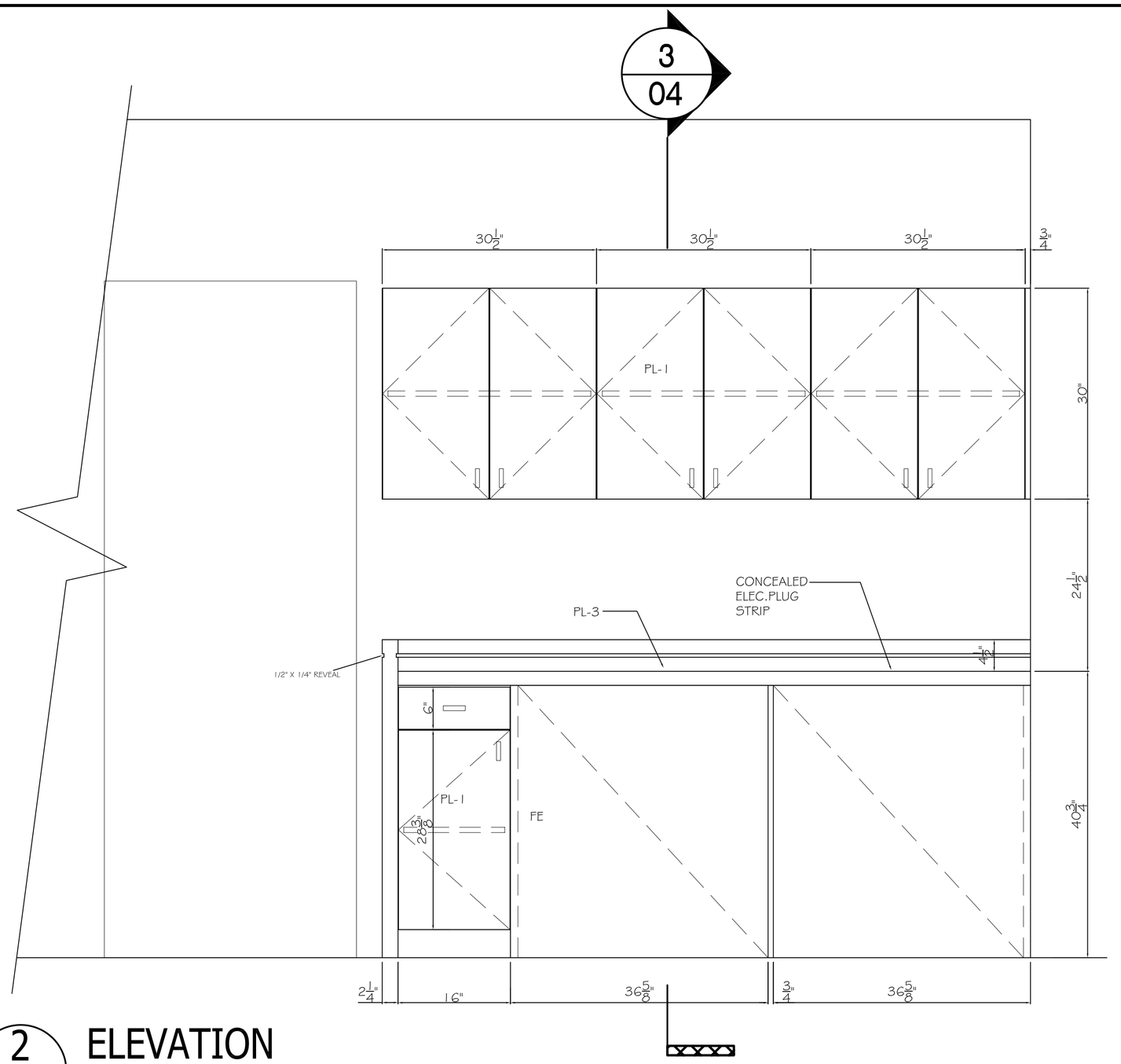

2/04 ELEVATION

1" = 1' CONST. DOC

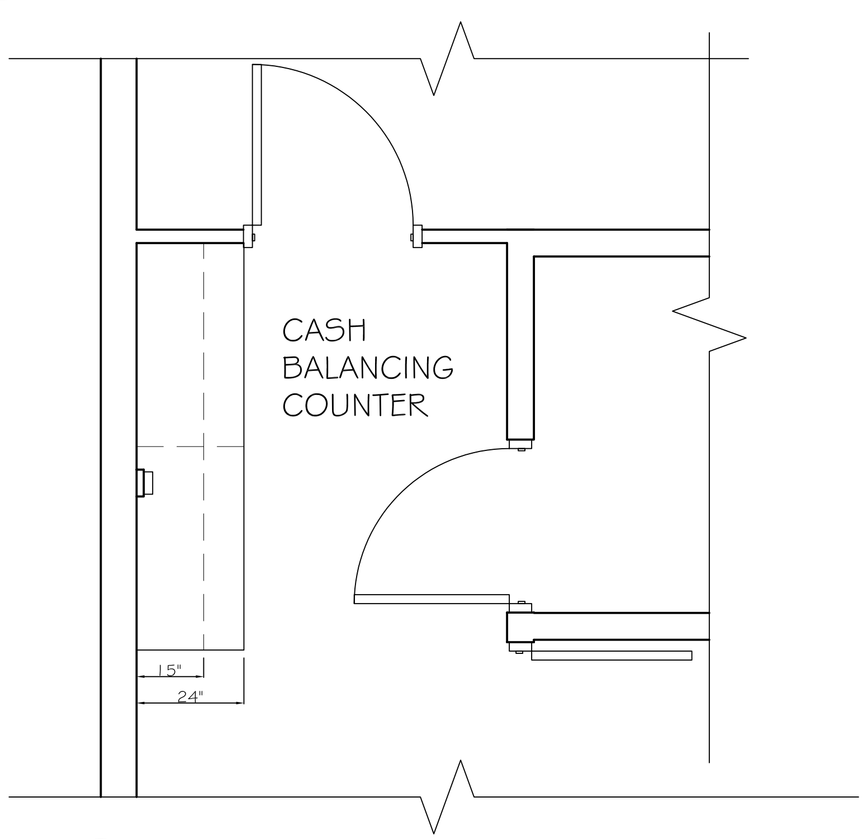

1/04 PLAN

1/2" = 1' CONST. DOC

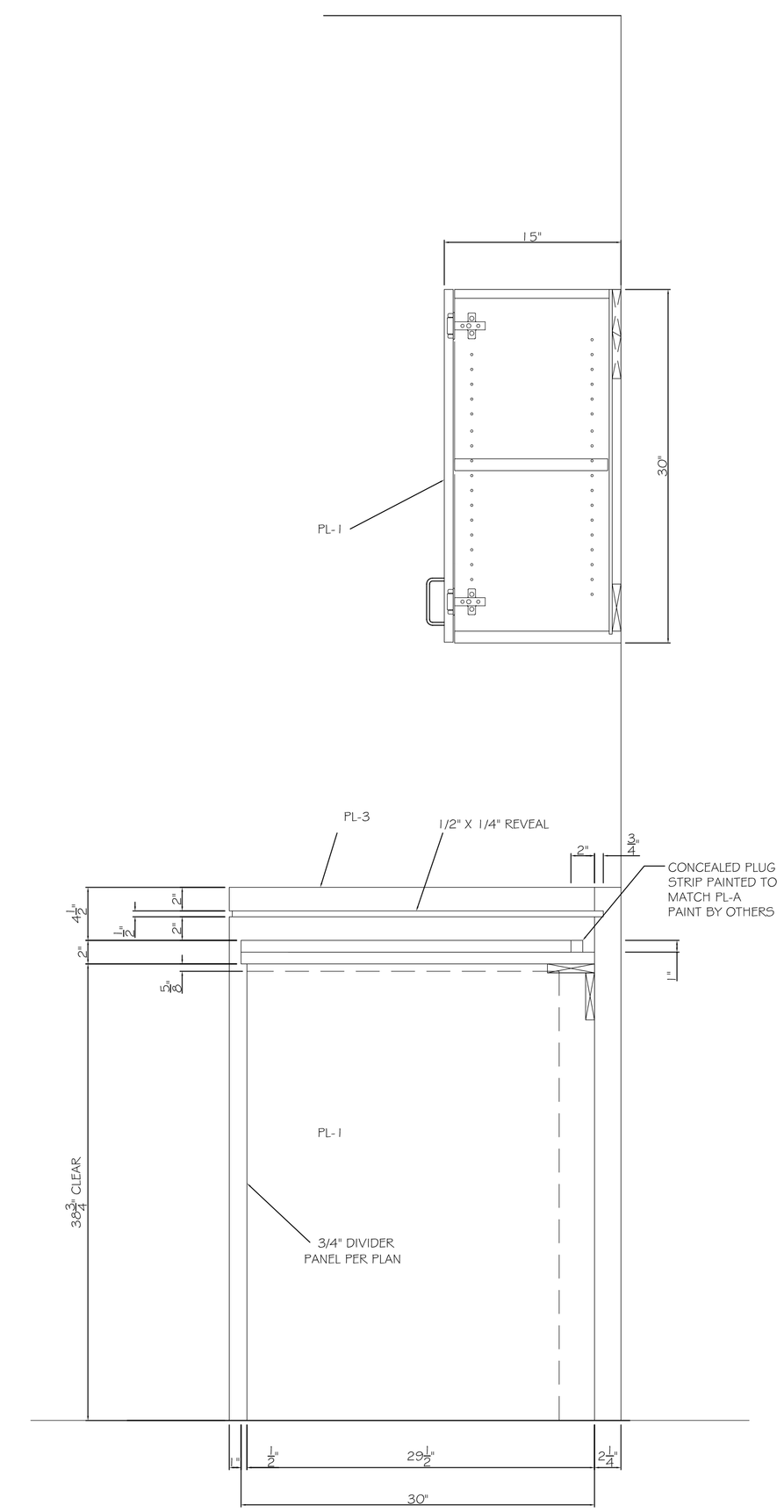

3/04 SECTION

1-1/2" = 1' CONST. DOC

RELEASED STAMP

REVISIONS:

GRADE: STANDARD

DATE SUBMITTED: 04/26/2005

RELEASED BY:

FILE:

JOB NUMBER:

DRAWING DATE: 04/26/2005

DRAWN BY:

APPROVED BY:

SHEET NUMBER

04