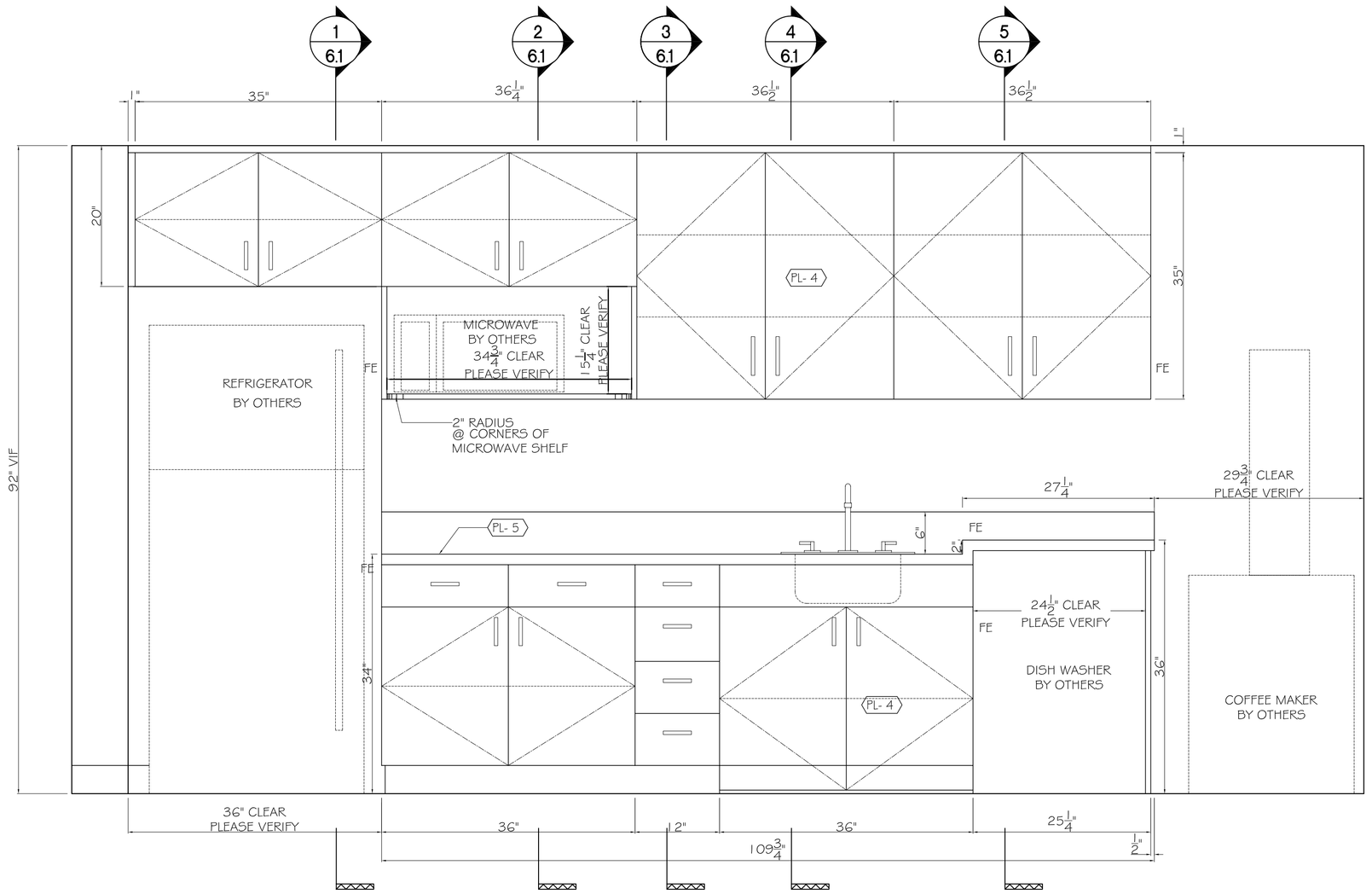

B 6.1 ELEVATION
1" = 1'

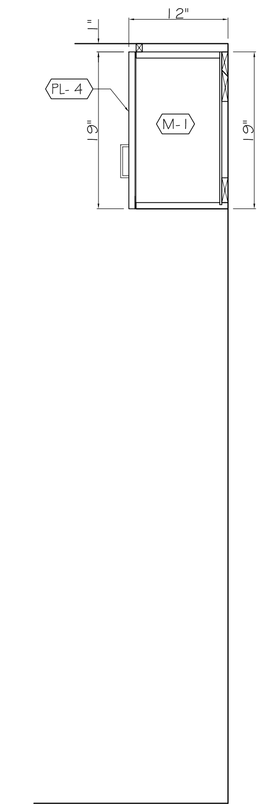

1 6.1 SECTION
1" = 1'

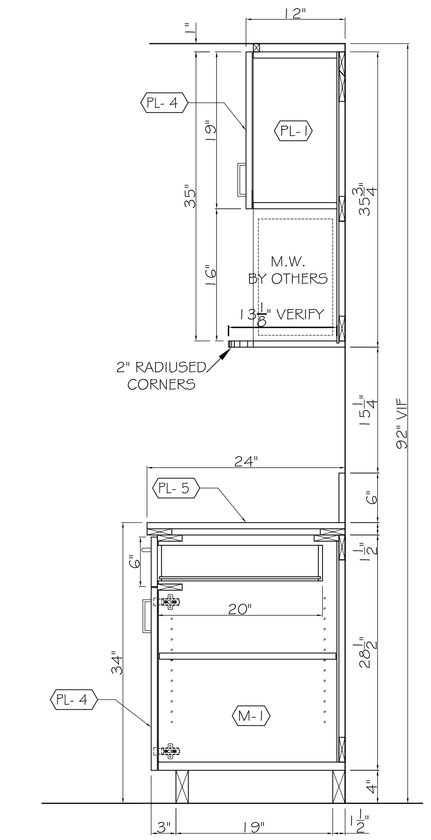

2 6.1 SECTION
1" = 1'

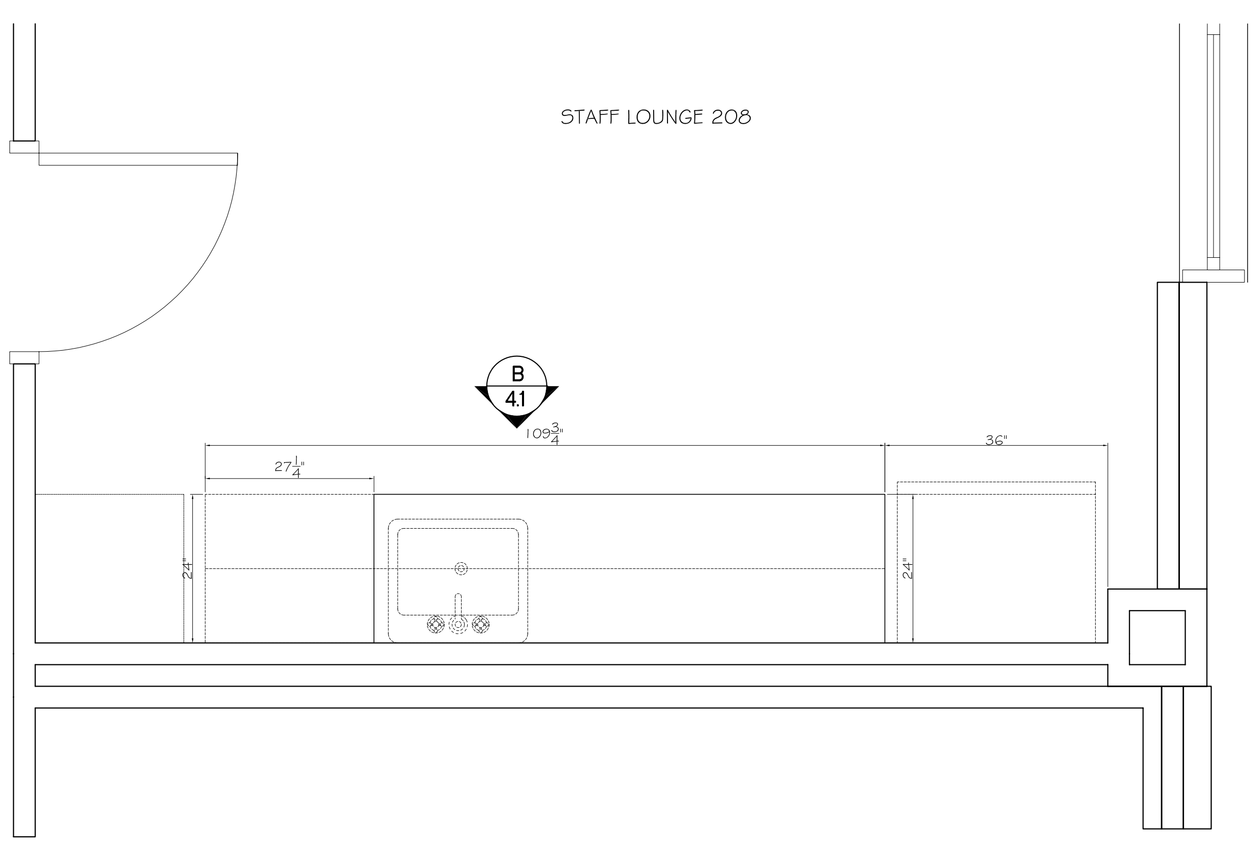

A 6.1 PLAN
3/4" = 1'

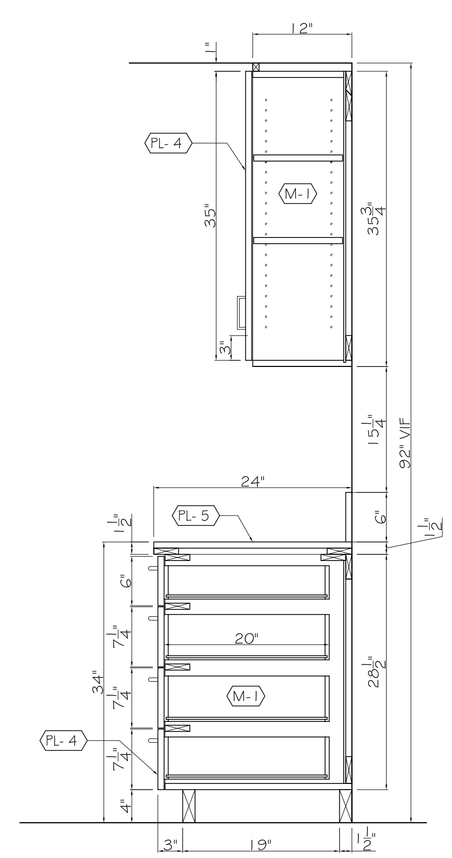

3 6.1 SECTION
1" = 1'

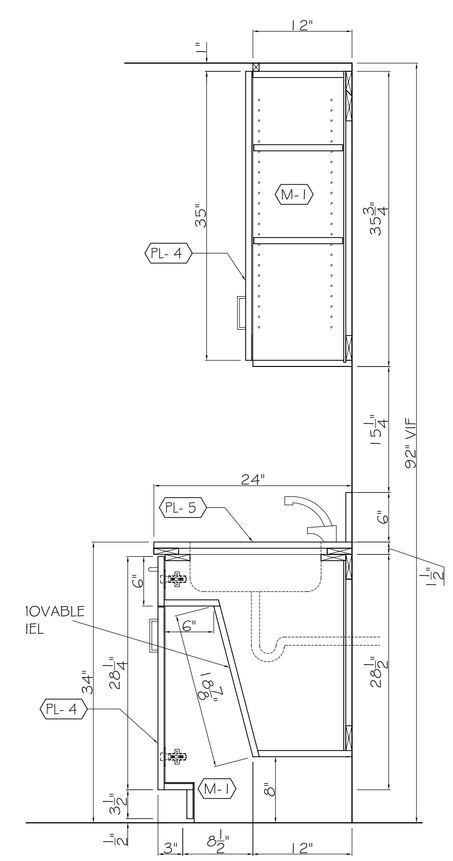

4 6.1 SECTION
1" = 1'

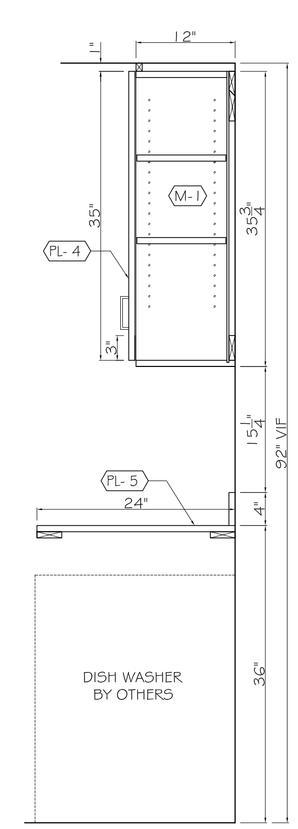

PRINT RECORD
FOR APPROVAL
DATE APPROVED
FILE & FIELD

REVISIONS		
NO.	DATE	DESCRIPTION	BY

PROJECT
LOCATION
CONTRACTOR
DRAWING TITLE STAFF LOUNGE 208
DRAWN BY: DJF DATE: 3/17/2006
CHECKED BY: DATE:
SCALE: AS SHOWN
FILE:
JOB NO. REV.
SHEET: 6.1